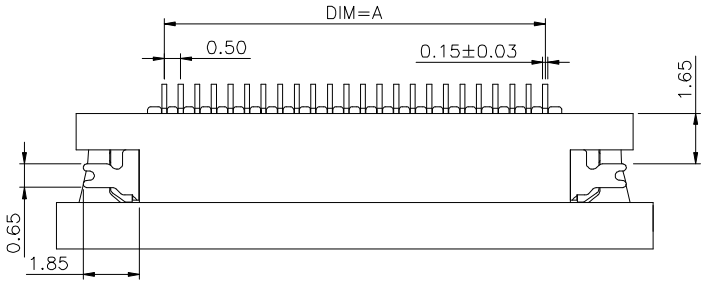

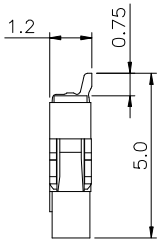

工程課
107.04.18
確認

Specifications:
Rating:
Current Rating:0.4 Amp
Voltage Rating:50V AC/DC
Operating Temperature Range:−25°~+85°C
Max Processing Temp.:260°C for 5 Seconds

Electrical:
Contact resistance:20m Ohm Max
Insulator resistance:500M ohm min.
Withstanding Voltage:200V AC/Minute

Material And Finish:
Housing:LCP UL94V−0 Natural
Cover(ZIF):LCP UL94V−0 Black
Terminal:Phosphor Bronze,
Plating:Tin plated Over Nickel

PART NO.:
FPC312L1XX-CTX-CF1337

04 ~ 60 PIN

T:Tube Packing
R:Tape/Reel Packing

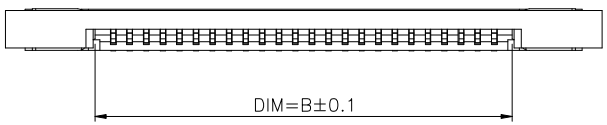

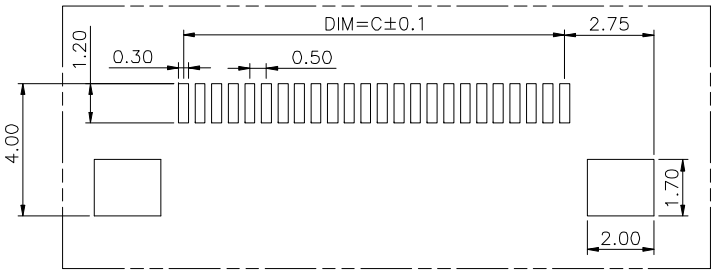

(Tolerance:0.05)
Recommended PCB Layout

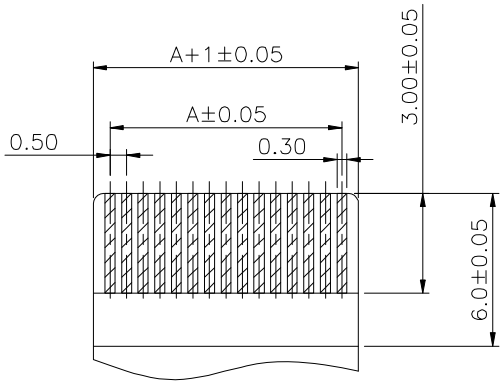

FFC/FPC Dimension(Thickness 0.30 mm)

No.of	A	B	C
04	1.50	2.56	7.96
05	2.00	3.06	8.46
06	2.50	3.56	8.96
07	3.00	4.06	9.46
08	3.50	4.56	9.96
09	4.00	5.06	10.46
10	4.50	5.56	10.96
11	5.00	6.06	11.46
12	5.50	6.56	11.96
13	6.00	7.06	12.46
14	6.50	7.56	12.96
15	7.00	8.06	13.46
16	7.50	8.56	13.96
17	8.00	9.06	14.46
18	8.50	9.56	14.96
19	9.00	10.06	15.46
20	9.50	10.56	15.96
21	10.00	11.06	16.46
22	10.50	11.56	16.96
23	11.00	12.06	17.46
24	11.50	12.56	17.96
25	12.00	13.06	18.46
26	12.50	13.56	18.96
27	13.00	14.06	19.46
28	13.50	14.56	19.96
29	14.00	15.06	20.46
30	14.50	15.56	20.96
31	15.00	16.06	21.46
32	15.50	16.56	21.96
33	16.00	17.06	22.46
34	16.50	17.56	22.96
35	17.00	18.06	23.46
36	17.50	18.56	23.96
37	18.00	19.06	24.46
38	18.50	19.56	24.96
39	19.00	20.06	25.46
40	19.50	20.56	25.96
41	20.00	21.06	26.46
42	20.50	21.56	26.96
43	21.00	22.06	27.46
44	21.50	22.56	27.96
45	22.00	23.06	28.46
46	22.50	23.56	28.96
47	23.00	24.06	29.46
48	23.50	24.56	29.96
49	24.00	25.06	30.46
50	24.50	25.56	30.96
51	25.00	26.06	31.46
52	25.50	26.56	31.96
53	26.00	27.06	32.46
54	26.50	27.56	32.96
55	27.00	28.06	33.46
56	27.50	28.56	33.96
57	28.00	29.06	34.46
58	28.50	29.56	34.96
59	29.00	30.06	35.46
60	29.50	30.56	35.96

承洧科技股份有限公司
Cherng Weei Technology Corp.

DESCRIPTION(內容): FPC 0.5mm H:1.2 W/ZIF Horizontal SMT Type Lower Contact Type(RoHS)	DRAWN(製圖): GONG	GENERAL TOLERANCE: (公差) .X ±0.20 .XX ±0.10 ANG. ±3°	REV: R0	REV	DESCRIPTION	DATE
PART NO: (料號) FPC312L1XX-CTX-CF1337	CHECKED(確認): TERESA		UNIT: mm	R0		2018.04.18
DWG NO(圖號): 0005132-XX232X	APPROVAL(核准): JOHNNY	SCALE(比例): FREE	SIZE: A4	R1		
			SHEET: 1/1	R2		
				R3		

CF1337