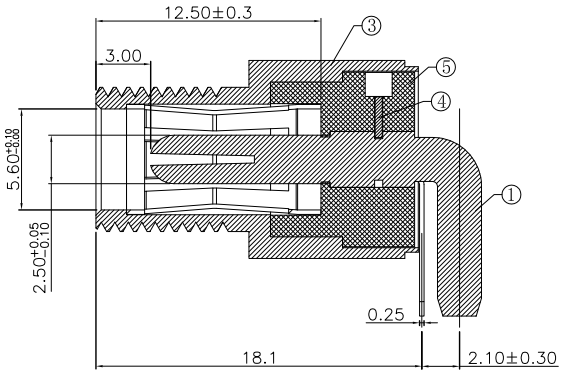

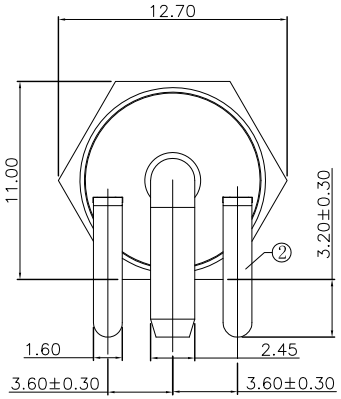

P.C.B LAYOUT

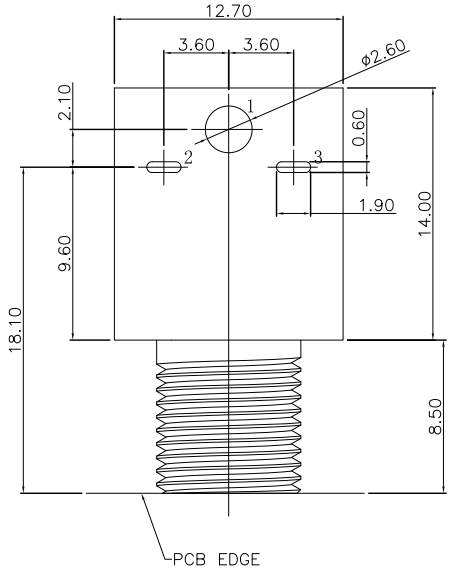

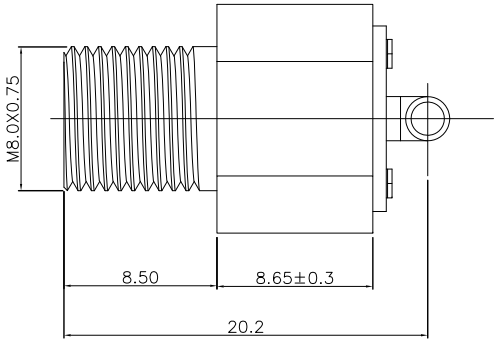

工程課
108.06.25
確認

SCHEMATIC

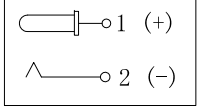

SPECIFICATION
1. Rating : DC 20V 10A;
2. Contact resistance: ≤0.03Ω;
3. Insulation resistance: ≥100MΩ (DC250V);
4. Withstand voltage: 500VAC ;
5. Insertion and extraction force: 4-40N;
6. life test: 5,000 cycles。

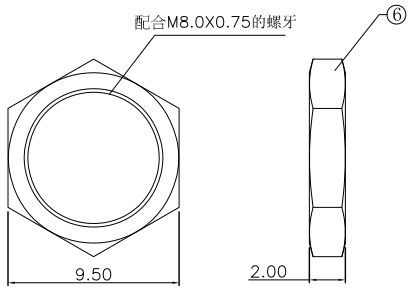

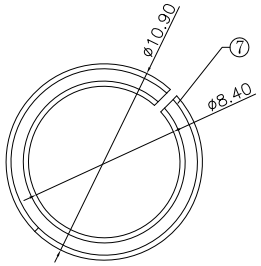

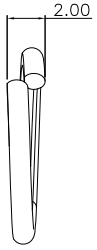

NO.	DESCRIPTION	QTY	MATERIAL	COLOR	REMARK
7	HARDWARE CIRCLE	1	SUS	———	———
6	NUT	1	BRASS	———	Ni−Plating
5	HOUSING	1	PBT	———	———
4	PEG	1	BRASS	———	N/A
3	CONTACT FOOT	1	ZINC ALLOY	———	Ni−Plating
2	CONTACT FOOT	1	BRONZE	———	Sn−Plating
1	PIN	1	ZINC ALLOY	———	Ni−Plating

承洧科技股份有限公司
CHERNG WEEI
Cherng Weei Technology Corp.

DESCRIPTION(內容): DC POWER JACK(RoHS)

PART NO: (料 號) CDJ-D060-2.5

DWG NO(圖號): DJ-D060

DRAWN(製圖): HUANG

CHECKED(確認): TERESA

APPROVAL(核准): JOHNNY

GENERAL TOLERANCE:(公差) X.X ±0.30 X.XX ±0.20

SCALE(比例): FREE

REV: R0

UNIT: mm

SIZE: A4

SHEET: 1/1

REV	DESCRIPTION	DATE
R0	RELEASE	2019.06.25
R1		
R2		
R3		

CF1165